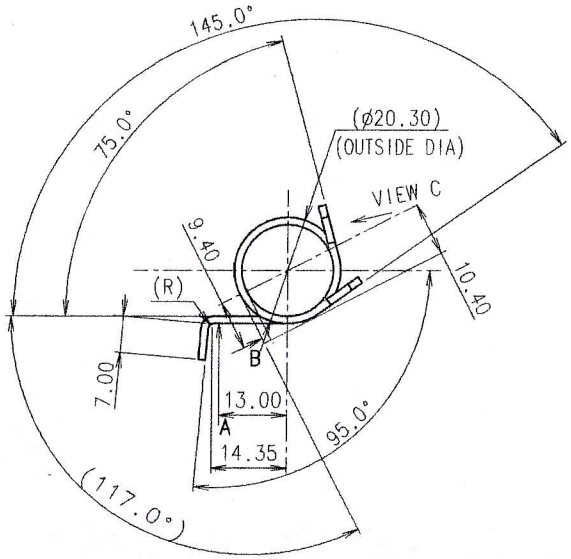

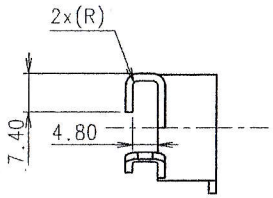

VIEW C

PE	QC
PE 11 JUL 2015 1	QA 01 JUL 2015 PS2

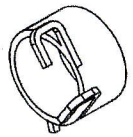

ねじり円筒コイルばね要目表
TABLE OF ESSENTIALS FOR CYLINDRICALLY COILED TORSION SPRING

材料 MATERIAL	SWIC-F (SW-C)	ばね特性 SPRING CHARACTERISTICS	指定ねじれ角 SPECIFIED TORSION ANGLE ϕ_1	75°	145°
材料の直径 mm DIAMETER OF MATERIAL	1.40		指定ねじれ角時のモーメント MOMENT AT SPECIFIED TORSION ANGLE mN・m	241.3	140.7±21.4
コイル外径 mm OUTSIDE DIAMETER OF COIL	20.3±0.2		案内棒の直径 mm DIAMETER OF GUIDE BAR	14.7	
巻数 NUMBER OF TURNS	$7\frac{297}{360}$ 7.825		熱処理 HEAT TREATMENT	HAL	
巻方向 DERECTION OF HELIX	右 RIGHT		防せい処理 RUST PREVENTIVE TREATMENT	XXX	

464.619
21.60
21.35
507.189

Qty:1PC/UNIT

GENERAL TOLERANCE OF MACHINED PARTS (NS-T-00-5507)					
TOLERANCE OF LINEAR DIMENSIONS			TOLERANCE OF ANGULAR DIMENSIONS		
RANGE OF LENGTH			LENGTH OF SHORTER SIDE		
OVER	MAX.		OVER	MAX.	
—	6	±0.1	—	10	±1°
6	30	±0.2	10	50	±0.5°
30	120	±0.3	50	120	±20'
120	400	±0.5	120	400	±10'
400	1000	±0.8	400	1000	±5'

1.オゾン層破壊物質を製造工程で使用しないこと。
2.RoHS指令（特定有害物質使用制限指令）（2002/95/EC）に準拠すること。
3.特定有害物質に関しては、東芝テック特定有害物質不含有/不使用管理配線の系譜に準拠すること。
4.包装・包装廃棄物指令(94/62/EC)に準ずること。
(本指令に該当する部品およびラベルなど)

1.Do not use ODS (Ozone Depleting Substances) in any process.
2.Conform to the RoHS directive (Restriction of Use of Certain Hazardous Substances)(2002/95/EC).
3.Conform to the provisions in the answer sheet for "TOSHIBA TEC Disuse of CertainHazardous Substances".
4.Conform to the Packaging and Packaging Waste Directive (94/62/EC). (Parts and labels, etc. applicable to this directive)

MATERIAL ~~SWIC-F~~ SEE THE ABOVE

SPEC./REMARKS: NOTES
TREATMENT/FINISH: NOTES

PREVIOUS DRAWING NO. | QT RANK: B1 | REF MASS(g) | CALC VM(cm³)

NAME: SPG-LVR-OPN-F-BU-C

東芝テック株式会社
TOSHIBA TEC CORPORATION

SCALE	SIZE	PAGE	PROCESS	DRAWING NO.	BASIC CODE	SUB	REV
1:1	A3	1/1	COILING		6LB10828	0	00

PAGE COMBINATION LIST

NO	ISSUE NO.	6	11	16
2		7	12	17
3		8	13	18
4		9	14	19
5		10	15	20

EDITED BY	DESIGN	CHECK	APPROVE	INITIAL ISSUE NO.
ADAM_NX	T.KAWAGUCHI 2005/06/07	T.IIJIMA 2005/06/07	Y.TERAO 2005/06/07	JVB12160 2005/06/07
DWGNO: 3	MODIFY: K.YONEYAMA 2009/02/17	CHECK 2009/03/04	APPROVE 2009/03/05 T.Morita	LATEST ISSUE NO. JVB26404

2009-03-05-08:32

FORMAL ISSUE / JVB26404-20090305

USED IN
Main: Ref:

SQ001

17