For OQC only

PE	QC
PE 11 JUL 2015 1	QA 11 JUL 2015 PS2

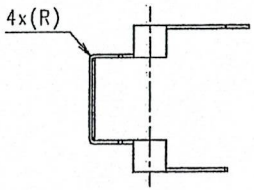

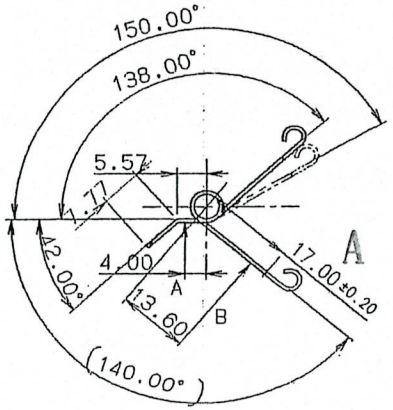

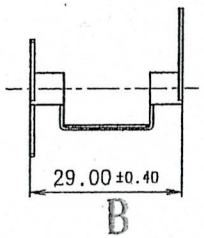

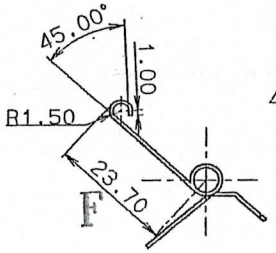

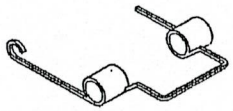

SEE THE ABOVE

ねじり円筒コイルばね要目表
TABLE OF ESSENTIALS FOR CYLINDRICALLY COILED TORSION SPRING

材料 MATERIAL	SWIC-F (SW-C)	ばね特性 SPRING CHARACTERISTICS	指定ねじれ角 SPECIFIED TORSION ANGLE ϕ_1	150°	138°
材料の直径 mm DIAMETER OF MATERIAL	0.70		指定ねじれ角時のモーメント MOMENT AT SPECIFIED TORSION ANGLE mN·m	17.08 D	20.22 $^{+4.04}_{-2.02}$ E
コイル外径 mm OUTSIDE DIAMETER OF COIL	6.1±0.2 C	案内棒の直径 mm DIAMETER OF GUIDE BAR		4.11	
巻数 NUMBER OF TURNS	$9\frac{320}{360}$	熱処理 HEAT TREATMENT		HAL	
巻方向 DERECTION OF HELIX	左,右 LEFT,RIGHT	防せい処理 RUST PREVENTIVE TREATMENT		XXX	

c8WN7007076 l:492.13 Qty:4PCS/UNIT

GENERAL TOLERANCE OF MACHINED PARTS (NS-T-00-5507)

TOLERANCE OF LINEAR DIMENSIONS			TOLERANCE OF ANGULAR DIMENSIONS		
RANGE OF LENGTH			LENGTH OF SHORTER SIDE		
OVER	MAX.		OVER	MAX.	
—	6	±0.1	—	10	±1°
6	30	±0.2	10	50	±0.5°
30	120	±0.3	50	120	±20'
120	400	±0.5	120	400	±10'
400	1000	±0.8	400	1000	±5'

1.オゾン層破壊物質を製造工程で使用しないこと。
2.RoHS指令（特定有害物質使用制限指令）（2002/95/EC）に準拠すること。
3.特定有害物質に関しては、東芝テック特定有害物質不含有/不使用証明書提出の条件に準拠すること。
4.包装・包装廃棄物指令(94/62/EC)に準拠すること。
(本指令に該当する部品およびラベルなど)

1.Do not use ODS (Ozone Depleting Substances) in any process.
2.Conform to the RoHS directive (Restriction of Use of Certain Hazardous Substances)(2002/95/EC).
3.Conform to the provisions in the answer sheet for "TOSHIBA TEC Disuse of Certain Hazardous Substances".
4.Conform to the Packaging and Packaging Waste Directive (94/62/EC). (Parts and labels, etc. applicable to this directive)

MATERIAL: XXX XXX
SPEC./REMARKS:
TREATMENT/FINISH:
PREVIOUS DRAWING NO. | QT RANK B1 | REF MASS(g) | CALC VM(cm³)
NAME: SPG-UPR2-BU-C

東芝テック株式会社 TOSHIBA TEC CORPORATION

SCALE	SIZE	PAGE	PROCESS	DRAWING NO.	BASIC CODE	SUB	REV
1:1	A3	1/1	COILING		6LB10831	0	00

EDITED BY	DESIGN	CHECK	APPROVE	INITIAL ISSUE NO.
ADAM_NX	T.KAWAGUCHI 2005/06/07	T.IIJIMA 2005/06/07	Y.TERAO 2005/06/07	JVB12160 2005/06/07

DIGWO	COUNT	MODIFY	CHECK	APPROVE	LATEST ISSUE NO.
	2	K.YONEYAMA 2009/02/17	2009/03/04	2009/03/05 T.Morita	JVB26404

PAGE COMBINATION LIST
NO: ISSUE NO. 1: 2: 3: 4: 5: 6: 7: 8: 9: 10: 11: 12: 13: 14: 15: 16: 17: 18: 19: 20:

FORMAL ISSUE / JVB26404-20090305

USED IN
Main: Ref:
SQ001

3/9/15