1.オゾン層破壊物質を製造工程で使用しないこと。
2.RoHS指令（特定有害物質使用制限指令）〔2002/95/EC〕に準拠すること。
3.特定有害物質に関しては、東芝テック特定有害物質不含有/不使用回答書記載の条項に準拠すること。

1.Do not use ODS (Ozone Depleting Substances) in any process.
2.Conform to the RoHS directive (Restriction of Use of Certain Hazardous Substances)[2002/95/EC].
3.Conform to the provisions in the answer sheet for "TOSHIBA TEC Disuse of CertainHazardous Substances".

Format Ver 080724_06

GENERAL TOLERANCE OF MACHINED PARTS (NS-T-00-5507)

| TOLERANCE OF LINEAR DIMENSIONS | | | TOLERANCE OF ANGULAR DIMENSIONS | | |
|---|---|---|---|---|---|
| RANGE OF LENGTH | | | LENGTH OF SHORTER SIDE | | |
| OVER | MAX. | | OVER | MAX. | |
| - | 6 | ±0.1 | - | 10 | ±1° |
| 6 | 30 | ±0.2 | 10 | 50 | ±0.5° |
| 30 | 120 | ±0.3 | 50 | 120 | ±20' |
| 120 | 400 | ±0.5 | 120 | 400 | ±10' |
| 400 | 1000 | ±0.8 | 400 | 1000 | ±5' |

PE
PE 11 JUL 2015 1

QC
QA 01 JUL 2015 PS2

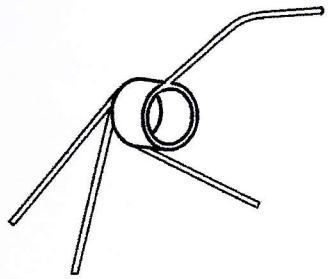

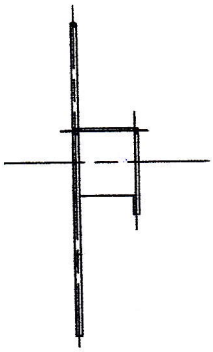

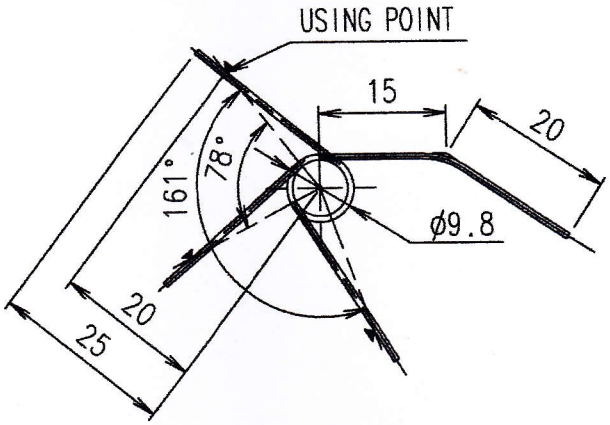


ねじり円筒コイルばね要目表
TABLE OF ESSENTIALS FOR CYLINDRICALLY COILED TORSION SPRING

| | | | | |
|---|---|---|---|---|
| 材料 MATERIAL | SUS304-WPB | ばね特性 SPRING CHARACTERISTICS | 指定ねじれ角 SPECIFIED TORSION ANGLE ° | 78 / 161 |
| 材料の直径 mm DIAMETER OF MATERIAL | 1.0 | | 指定ねじれ角のモーメント MOMENT AT SPECIFIED TORSION ANGLE N・mm | 53.42±9.52 / 110.26±12.36 |
| コイル外径 mm OUTSIDE DIAMETER OF COIL | 9.8 | 案内棒の直径 mm DIAMETER OF GUIDE BAR | | 6.62 |
| 巻数 NUMBER OF TURNS | 8.9 | 熱処理 HEAT TREATMENT | | --- |
| 巻方向 DIRECTION OF HELIX | 左 LEFT | 防せい処理 RUST PREVENTIVE TREATMENT | | --- |

メーカ製品コード
MANUFACTURER PRODUCT CORD

246.05
35.00
20.0
301.05

FORMAL ISSUE / JVB20341-20070615

MATERIAL: SUS304 XXX
SPEC./REMARKS: XXX
TREATMENT/FINISH: NOTES

| PREVIOUS DRAWING NO. | REF MASS(g) | CALC VM(cm³) |
|---|---|---|
| XXX | XXX | XXX |

NAME: SPG-UNIT-SUPT-SDL

東芝テック株式会社
TOSHIBA TEC CORPORATION

| SCALE | SIZE | PAGE | PROCESS | DRAWING NO. | BASIC CODE | SUB REV ▲ |
|---|---|---|---|---|---|---|
| 1:1 | A4 | 1/1 | COILING | | 6LB28428 | 0 00 |

PAGE COMBINATION LIST

| NO. | ISSUE NO. | | |
|---|---|---|---|
| 1 | | 6 | |
| 2 | | 7 | |
| 3 | | 8 | |
| 4 | | 9 | |
| 5 | | 10 | |

QT RANK: XXX

| EDITED BY | DESIGN | CHECK | APPROVE | INITIAL ISSUE NO. |
|---|---|---|---|---|
| IDEAS | S.GOSAVI 2007/06/15 | 2007/06/15 | 2007/06/15 | JVB20341 |

| CHGNO | COUNT | MODIFY | CHECK | APPROVE | LATEST ISSUE NO. |
|---|---|---|---|---|---|
| | X | | | | |

USED IN
Main: Ref:

SQ001

2007-06-15-18:54

27