REVISIONS

REV.	ECO NO.	BRADY Y NUMBER	DESCRIPTION OF CHANGE	REVISED BY	DATE
-					
-					
00	37839	Y4841720		MEYERMA	09/24/2019

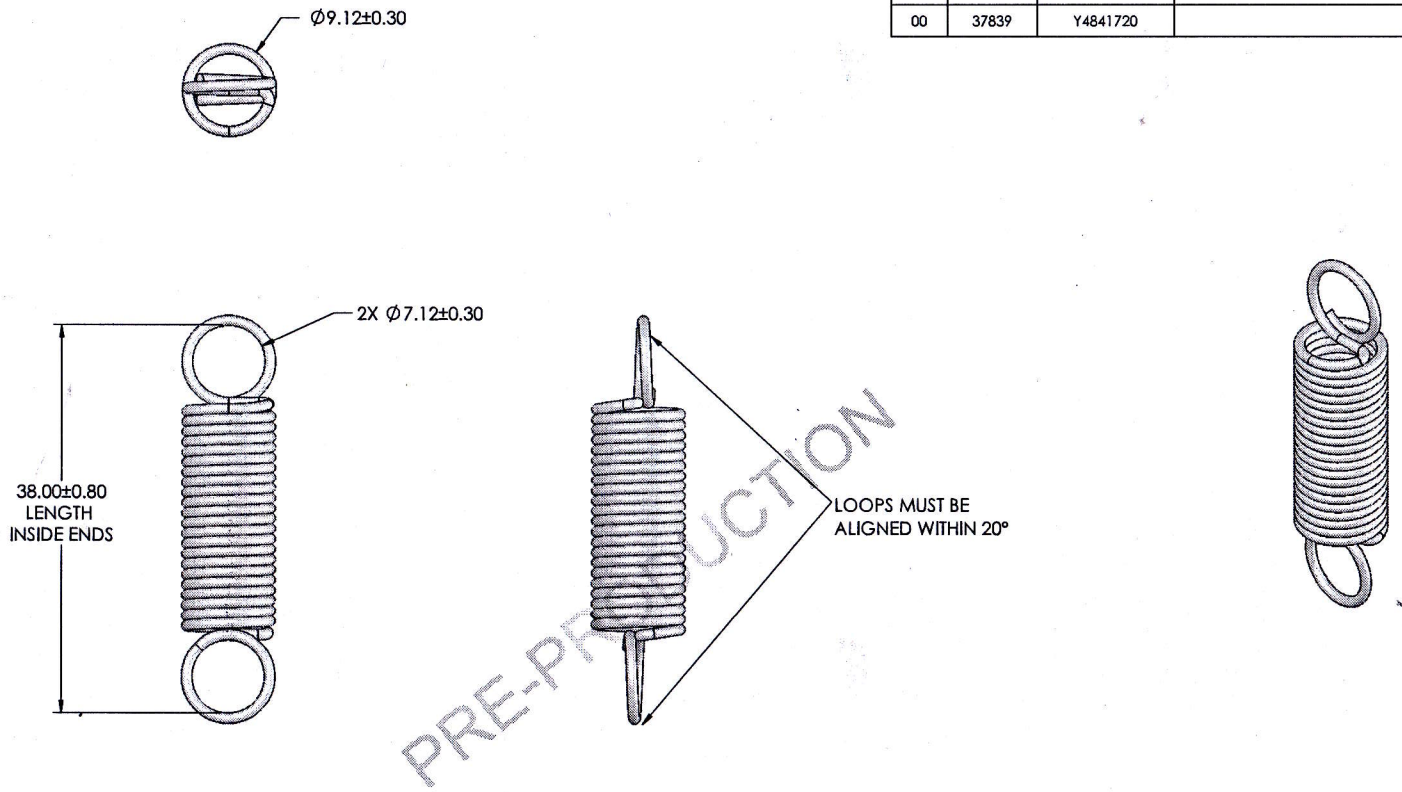

NOTES:
1. RAW MATERIAL: ROHS COMPLIANT PRE NICKEL COATED HIGH CARBON SPRING STEEL WIRE PER JIS G3521 (SW-C)
2. WIRE DIAMETER: 1.00 +/- 0.0102
3. NUMBER OF COILS: 21.5 COILS
4. SPRING RATE: 0.861 N/MM REF.
5. RIGHT HAND WOUND
6. CLOSE WOUND
7. ENDS: ENGLISH LOOPS
8. DIMENSIONS WHICH ARE ENCAPSULATED OR DESIGNATED AS "CTQ" (CRITICAL TO QUALITY) ARE CRITICAL CHARACTERISTICS PER THE BRADY SUPPLIER MANUAL.
9. COMPONENT MATERIALS NEED TO COMPLY WITH WITH ROHS, REACH, AND OTHER APPLICABLE REGULATIONS PER BRADY SYSTEMS SPECIFICATION #SP00481/Y453647.
10. REFERENCE BRADY PACKAGING AND CLEANLINESS SPECIFICATION SP00322/Y1321.

ENG. SPECIFICATIONS EXCEPT AS NOTED:

DIMENSIONS ARE IN ACCORDANCE WITH ASME Y14.5Y-1994
INTERPRET DRAWING IN ACCORDANCE WITH ASME Y14.100

UNLESS OTHERWISE SPECIFIED
DIMENSIONS ARE IN MILLIMETERS
DECIMALS: X. = ± 0.5
.X = ± 0.25
.XX = ± 0.13
ANGLES: = ±0°30'

THIRD ANGLE PROJECTION

STANDARD MACHINING 3.2

DO NOT SCALE

THE INFORMATION CONTAINED IN THIS DOCUMENT IS CONFIDENTIAL AND THE SOLE PROPERTY OF BRADY CORP. AND MAY NOT BE USED OR REPRODUCED WITHOUT THE WRITTEN PERMISSION OF BRADY CORP.

DWG BY	MEYERMA	PROJECT	SCALE
DATE	09/24/2019	JUNIOR	2:1
CHKD BY			
DATE			
MATERIAL	SEE NOTES		
FINISH	SEE NOTES		
DWG TITLE	SPRING, DAMPENER, JNR		

BRADY
P.O. Box 2131
Milwaukee, Wisconsin 53201
Phone (414) 358-6600

SIZE A3	MODEL REV	00	STATUS	EX

SHEET	DWG NO	REV
1 OF 1	JNR43414	00

DRAWING DIR:0000000000000000000043415 REVISION:00